http://www.reicon.com.cn

PROPRIETARY INFORMATION	REVISIONS					
THIS DRAWING IS THE PROPERTY OF REICON ENCLOSURES DISCLOSURE OR REPRODUCTION OF THE INFORMATION ON THIS DRAWING IS PROHIBITED WITHOUT PRIOR WRITTEN CONSENT OF REICON ENCLOSURES.	E.C.O.	ZONE	REV.	DESCRIPTION	DATE	BY

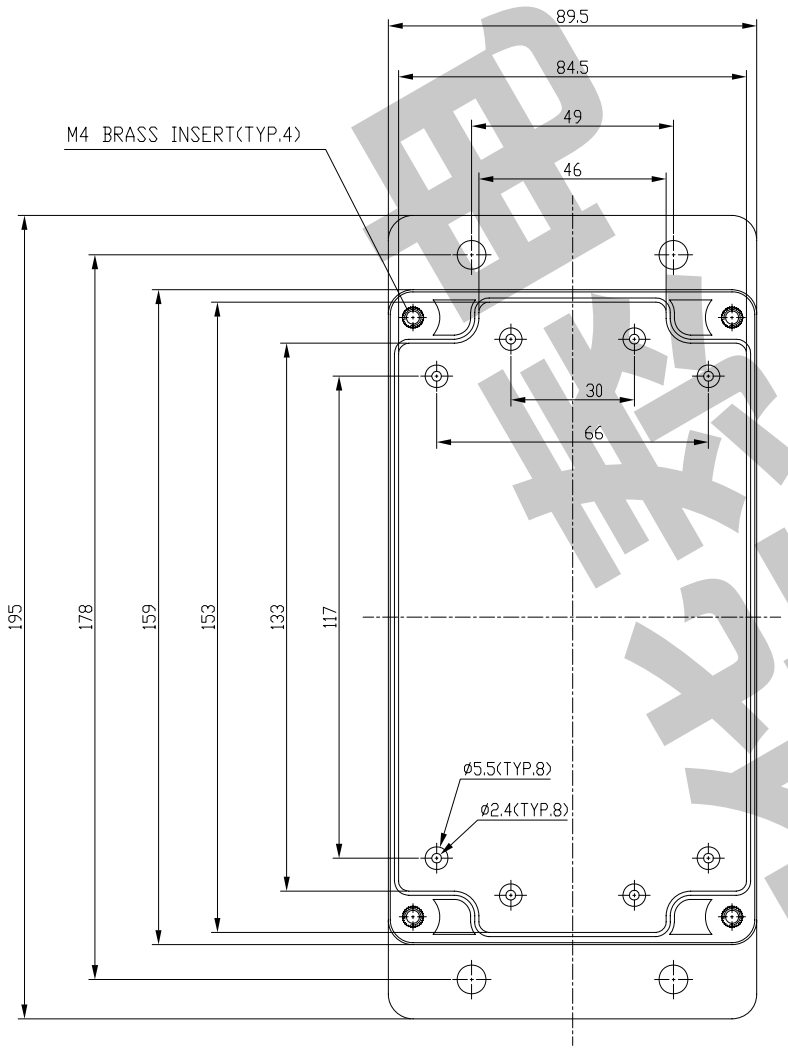

TOP VIEW WITH
COVER REMOVED

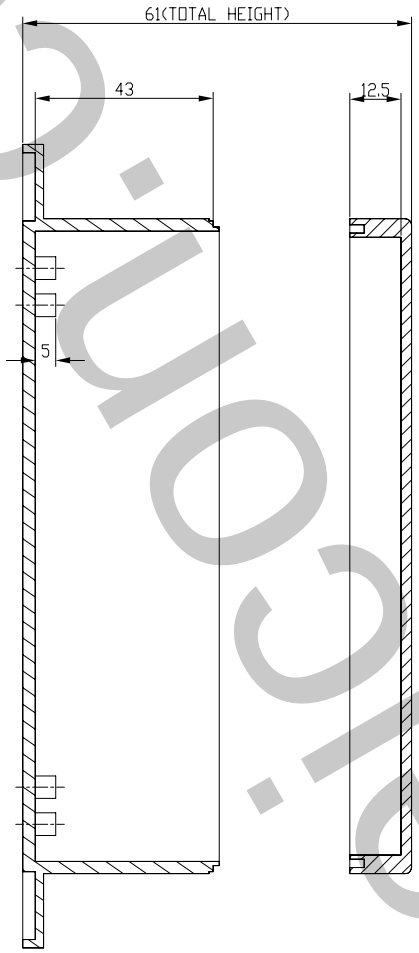

SIDE SECTION VIEW

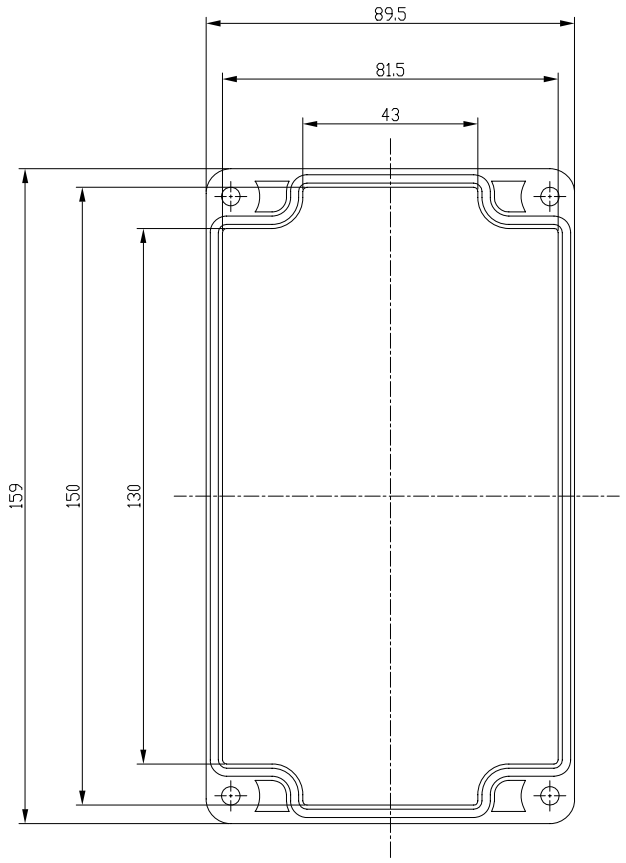

BOTTOM VIEW WITH
BODY REMOVED

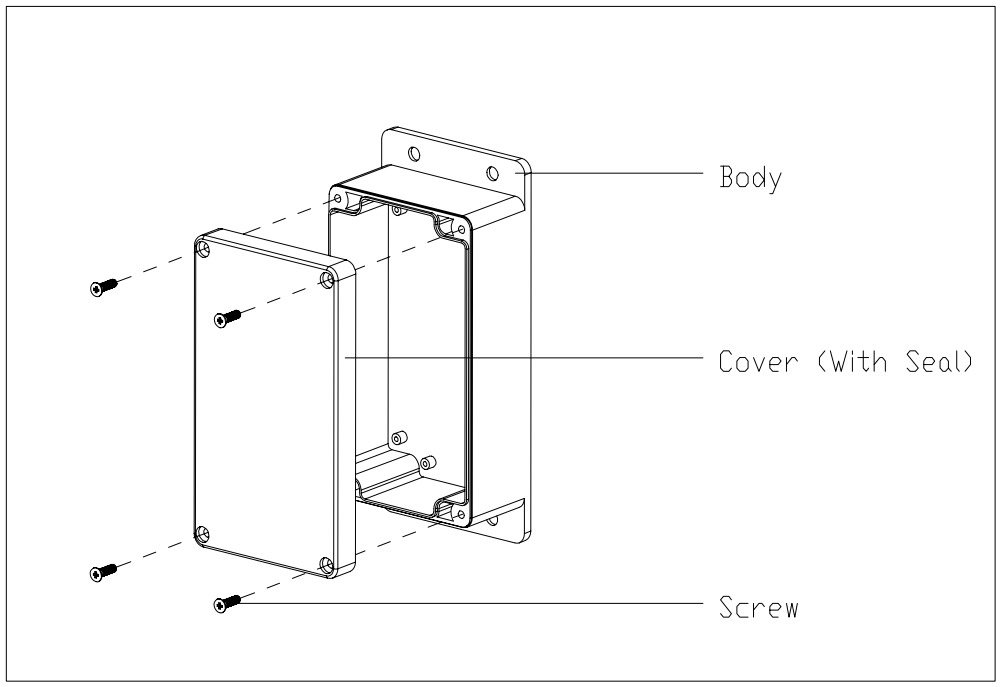

http://www.reicon.com.cn	MATERIAL ABS	APPROVALS	DATE	北京瑞康华泰电子设备有限公司 BEIJING REICON ELECTRONICS EQUIPMENT CO., LTD.
		DRAWN		
		CHECKED		
	COLOR BEIGE	CUSTOMER		TITLE: JUNCTION BOXES
DO NOT SCALE DRAWING 部分图元可能未按比例绘制	THIS DRAWING IS ONLY FOR YOUR REFERENCE 图上尺寸仅供参考，请以实际产品为准	ALL DIMENSIONS ARE IN MM		DWG. NO. 01.006F / REV.
				PROJECTION TYPE / SHEET 1 OF 1 / SIZE A2

西科技设计 www.oj.com.cn